Kaupert

DENESTER

We will tidy up!

Perfect integration of complete packaging in running production.

Worst going packaging and production processes minimize your productivity. To save our customers from such problems we developed with beginning (in the sixties) of the manufacturing of own Denesters to becoming a supplier for complete systems.

Kaupert Denesting Equipment and Kaupert assortment Trays originate from the same source will guarantee the trouble-free operation of your production line. Kaupert Denesters (brand name HES) are intended for two different manufacturing principles. While HES III (pages 6 and 7) will withdraw the tray/blister purely mechanically and will place it on a conveyor belt, HES II (pages 4 and 5) will actively and directly place the trays/blister into a tool mould, a chain or a carton, thanks to its suction tools. All Denesting Equipment will be manufactured to your specifications and will take all exceptional features of your production line or products into consideration.

Kaupert Denesters

will be...

... adapted to your production

... supplied together with electronic controls

... supplied ready for operation

they operate...

... fully automatically

... with precision

... with up to 60 strokes/min.

... with hardly no maintenance effort

they feature...

... a sophisticated construction

... a wide span of settings for different formats

... an exact navigation of the trays right to the placing point

... a single or automatic multiple magazine

Denester HES II

The Kaupert Denester HES II works with suction tools and will preferably be used for high volumes and mass production for which multiple trays/ blister have to be placed simultaneously in one stroke. Due to its variable settings the HES II can work nearly all formats and sizes (picture showing HES II with triple denesting).

Technical Data

Housing Measurements:

Length:	1430 mm
Width:	700 - 1400 mm
Filling Height in Magazine:	1200 mm
Total Weight:	approx. 200 kg
Speed:	30 strokes / min / magazine
Electrical power:	2000 watts
Air requirement:	70 litres / h at 6 bar
Stacking distance of trays:	minimum 3,7 mm

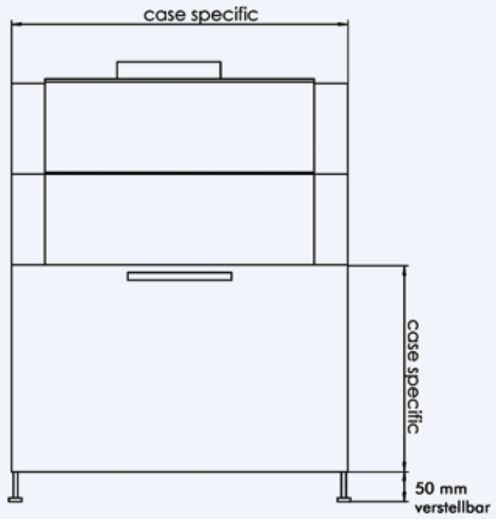

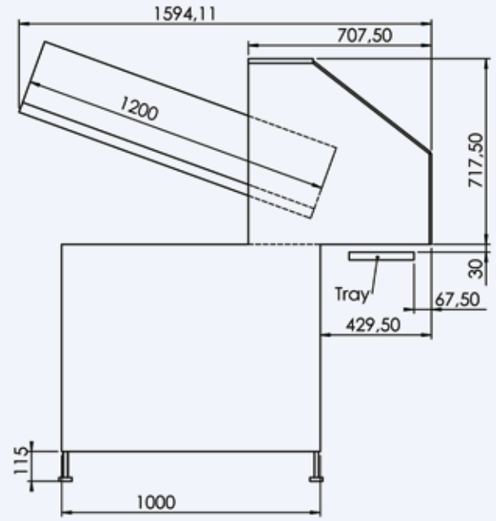

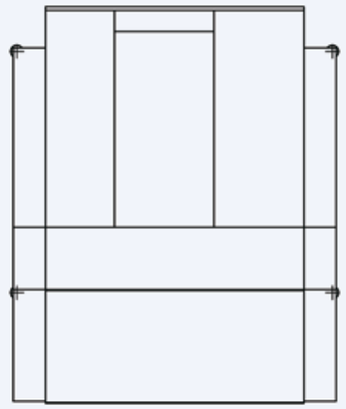

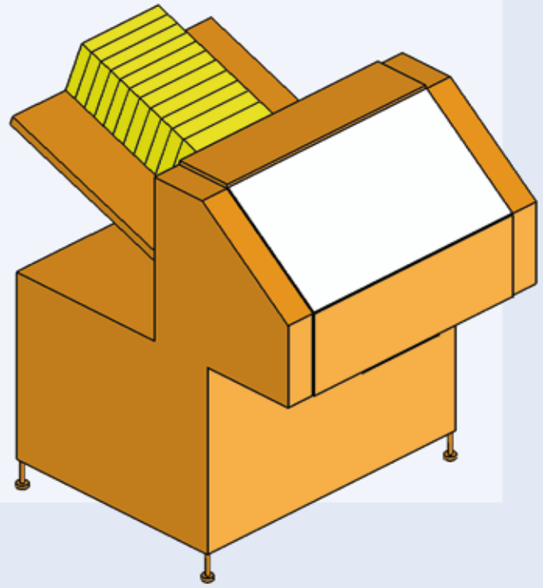

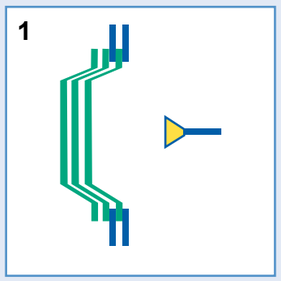

Picture 1
0-Position (one tray fixed)

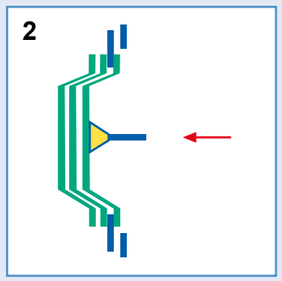

Picture 2
Suction-tool is driving into the first tray.

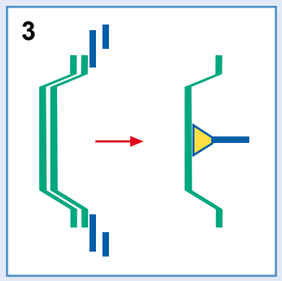

Picture 3
Suction-tool is taking the first tray out of the row.

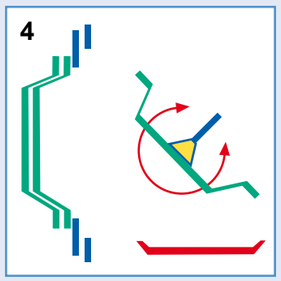

Picture 4
Suction-tool is brandishing the tray into vertical position.

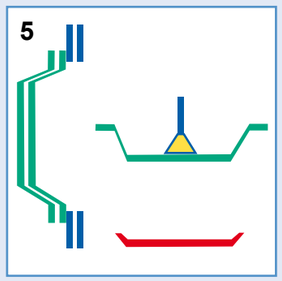

Picture 5
Denester is waiting for external signal.

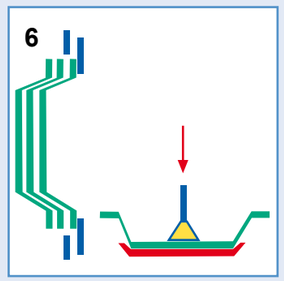

Picture 6
Suction unit is placing the tray into defined position and the separating plate is separating the second tray from the row.

Denester HES III

The Kaupert Denester HES III will work with one tray/blister per stroke.

An additional multiple magazine will provide a sufficient stock of trays even at high speed.

Technical Data

Housing Measurements:

Length:	420 mm
Width:	470 mm
Filling Height in Magazine:	approx. 1000 mm
Total Weight:	approx. 50 kg
Speed:	60 strokes / min
Electrical power:	2000 watts
Air requirement:	70 litres / h at 6 bar
Stacking distance of trays:	minimum 3,7 mm

single-magazine:

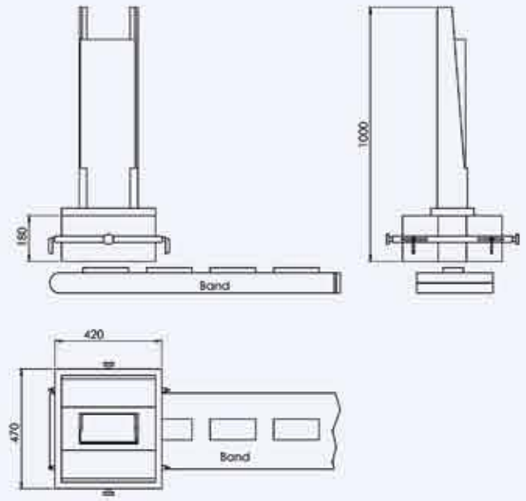

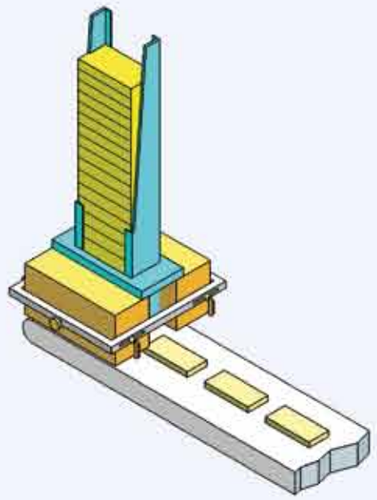

multiple-magazine:

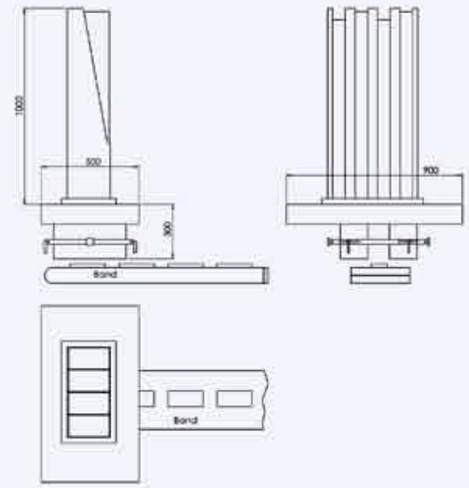

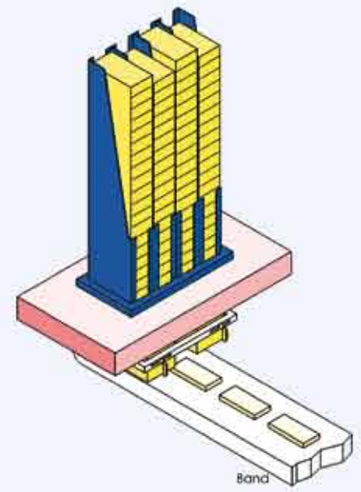

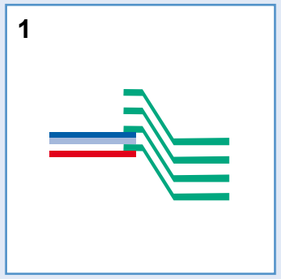

Picture 1
0-Position – Three coloured separating plates are separating first tray of the row.

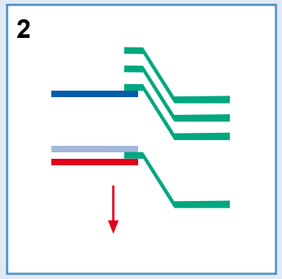

Picture 2
Plate 1 and 2 are moving down to remove the first tray from the row. 3rd separating plate is holding the row in the magazine.

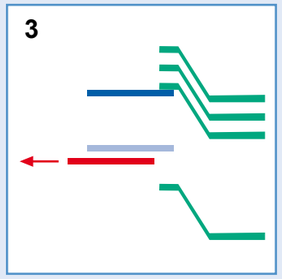

Picture 3
The first separating plate releases the tray which drops down.

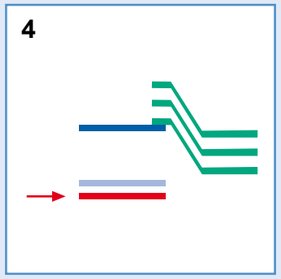

Picture 4
The first separating plate is moving backwards in the original position.

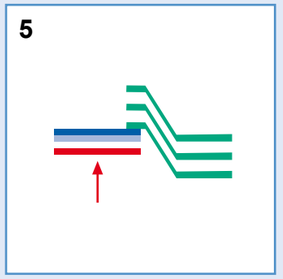

Picture 5
Plate 1 and 2 are moving up into the original position.

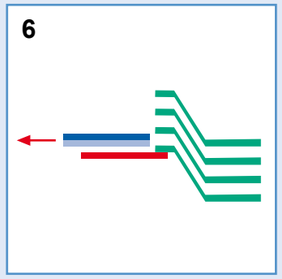

Picture 6
Plate 2 and 3 are moving backward so that tray row is ready for next cyclus.

www.kaupert-online.com

Dr. Ing. Kaupert GmbH & Co.
Gisselberger Str. 59
D-35037 Marburg
Phone: +49-6421/9133-0
Fax: +49-6421-9133-44
thermoformung@kaupert-online.com
www.kaupert-online.com